TECHNOLOGY

HOLYKELL®

HPT200

PRESSURE

•DATASHEET•

1. Pressure Measurement 2. Level Measurement 3. Temperature Measurement
4. Flow Measurement 5. Display & Control Instruments

HPT200 series

Universal Industry Pressure (Level) Transducer & Transmitter

Applications

- Critical industrial applications
- Petroleum
- Chemi-industry
- Metallurgy
- Power station
- Hydrology, Agriculture
- Harsh environments in the process industry
- Fuel storage and transport

Features

- Non-linearity up to 0.125 % of span
- High Shock and Vibration
- Customized outputs, electrical connections and pressure ports
- CE ATEX RoHS certificate approved
- Overcurrent /overvoltage protection
- Polarity Protection
- Full sealed high stability impact design

Profiles

HPT200 pressure transducer/transmitters use high quality imported U.S.A piezoresistive pressure sensor,Complete with a fully welded316 stainless steel housing, high shock and vibration and EMI/RFI protection.It will survive in the

HPT200 offers continuous measuring ranges between -1~5 to 0~1000 bar and it can be combined with all the standard industry output signals, the most common process connections and a wide number of electrical connections.

Furthermore, it offers numerous options, such as different accuracy classes, extended temperature ranges and customer specific pin assignments,meaning it can be suited to the widest range of applications.

Holykell can provide a cost effective solution for pressure monitoring for a variety of applications. Welcome to your inquiry.

Measuring range	
bar	-1 to 1...0 to 0.1…0 to 1000
Kpa	-100 to 100..0 to 10…0 to 100000
psi	-15 to 15..0 to 1.5…0 to 15000
mbar	-1000 to 1000...0 to 100…0 to 1000000
m	0 to 1...50m Level (Customize)

They give measuring range are also available in Mpa , Pa,in Hg,mm Hg

Materials

Wetted Parts	Standard	Option
Case and sensor	Stainless steel 316	316 SST/SUS321
Filled Oil	Silicone oil	Fluorocarbon oil
Cable	PVC	PTFE/PUR/PE

Specifications

Ambient Temperature: 25°C (unless specified)

Parameter	HPT200-H/EX/C8/C5/G				
Pressure Range	Gage /Absolute / Sealed gauge / Negative pressure optional.				
Safe Overload	200% F.S.(standard)				
Burst Pressure	300% F.S. (standard)				
Accuracy:	≤ ±0.5%F.S; ≤ ±0.25%F.S ≤ ±0.1%F.S (Customized)				
(Linearity Hysteresis	Including non-lin., rep. and hys.				
Repeatability)	Optional				
Total Error Band	0…50 °C max. ±0.5 %FS; -10…70 °C max. ±1.0 %FS				
Long Stability	-Standard: 0.1%F.S±0.05%				
Working Temp	-30℃~85℃				
Storage Temp	10℃~50℃(standard); -30℃~80℃(customized)				
Medium Compatible	Compatible with 316 Stainless Steel or 1Cr18Ni9Ti stainless steel				
Electronic Wire	2 Wires	3 or 4 Wires	3 Wires	4 Wires	3 Wires
Output	4~20mA or 4-20mA+HART	4~20mA or Double 4-20mA	0~5V,1~5V, 0-10V	Rs485	4~20mA +Temp(Ω)
Power Supply	7~30V/12~36Vdc	12~36Vdc	7~30V/12~36Vdc	10~30Vdc, 12~36Vdc	
Load Resistance	(U-10)/0.02 (Ω)	Current type: (U-10)/0.02 (Ω); Voltage type: ＞100K Ω			
Insulate resistance	>100M Ω @100V dc				
Zero Temp. Drift	0.03%FS/℃（≤100kPa）, 0.02%FS/℃（>100kPa）				
Body materials	316 stainless steel (standard); 1Cr18Ni9Ti stainless steel optional 316L				
Material of diaphragm	316L Stainless steel				
Filling oil	Silicon oil (standard); Fluorocarbon oil (Oxygen Services)				
Electronic connection	-DIN43650 Hirschman Connector, 4-poles and IP65. -Plug: (4/5-poles) Type IP65; -Directly Outlet Cable Type IP65 (IP68 by customized).				
Limiting Frequency	1 kHz				
Mechanical vibration	±20g				
Pressure connect port	G1/4''male, G1/2''male, 1/8''NPT male, 1/4''NPT male, 1/2''NPT male and female optional. (by customized)				
Explore Proof Grade	As drawing table listed				
Water Proof	IP65(HPT200-H,HPT200-C5); IP67 (HPT200-C8)				
Response time	≤10ms				
Endurance	＞100 million cycles, 0…100 %FS at25℃				
Options	Temperature Range by customized, Maximal range: -40…+120 °C Oil Filling Fluorocarbon oil (O2-compatible), olive-oil, lowest temperature oil (-55 °C) Pressure Connection, Electrical Connection Others on request. withstand Xylene medium pressure and level application (customized)				

Dimensions and Drawing

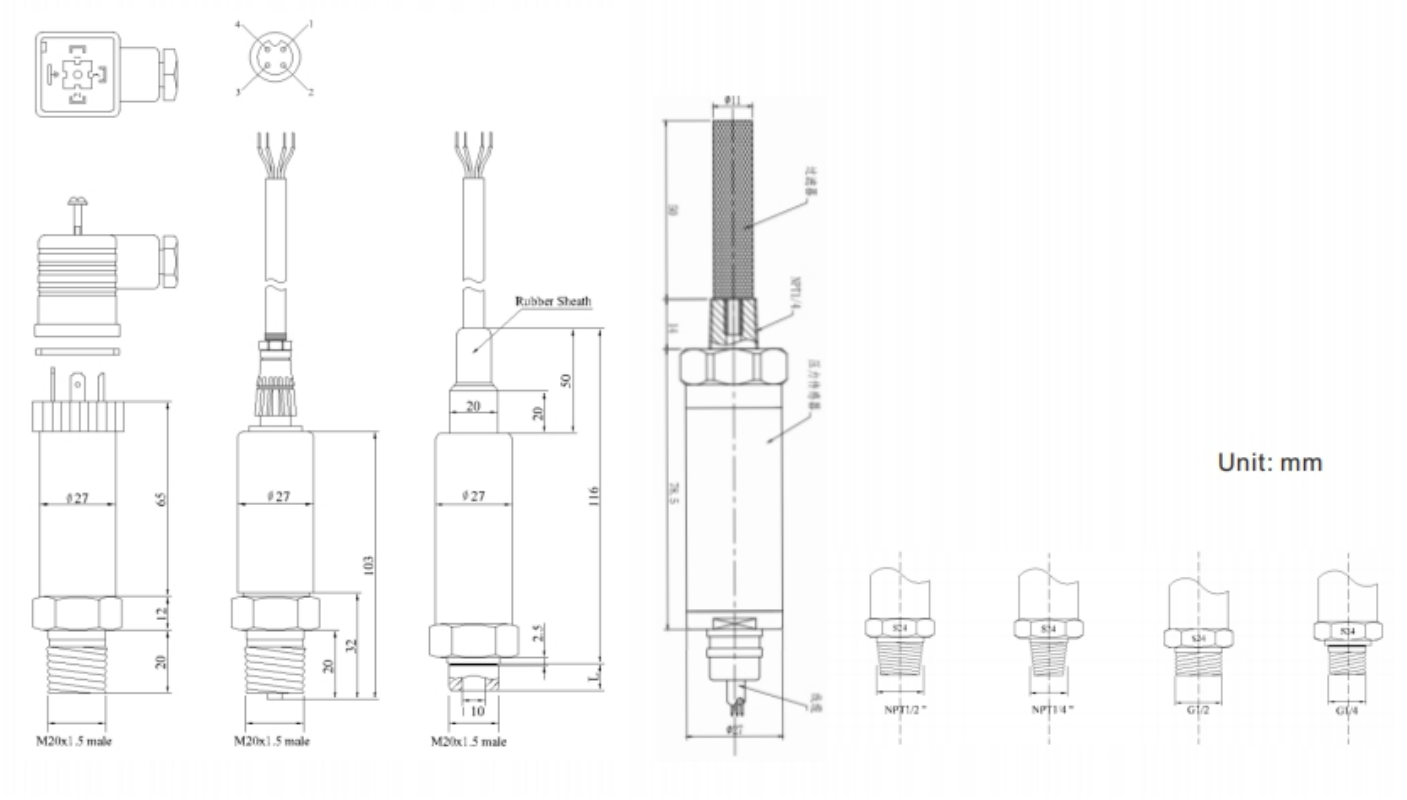

Electronic Connection

	Directly sealed cable		
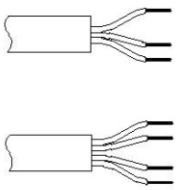	Current	Red	Vcc+
		Green	S+
		Black	Shield
	Voltage	Red	Vcc+
		Green	GND
		Yellow	S+
		Black	Shield

	Directly sealed cable		
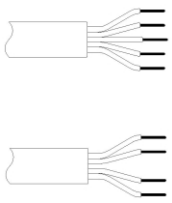	4-20mA +Temp	Red	Vcc+
		Green	S+(Pressure)
		Yellow	S+(PT100A)
		Blue	S+(PT100B)
		Black	GND&Shield
	Rs485 RTU Modbus	Red	Vcc+
		Green	Vcc-&S-
		Yellow	RS485A
		Blue	RS485B

	DIN 43650 Connector		
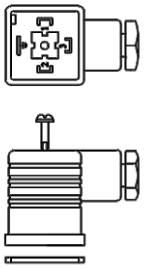	Current	1	Vcc+
		2	S+
		3	NC
		4	Shield
	Voltage	1	Vcc+
		2	GND
		3	S+
		4	Shield

	Plug:(4/5-poles) Type		
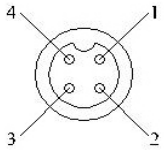	Current	1	Vcc+
		2	S+
		3	NC
		4	Shield
	Voltage	1	Vcc+
		2	S+
		3	GND
		4	Shield

S=Signal, Vcc=Power Supply, GND=Vcc-&S-

How to Order

1. Range Selection Table:

Range code	Pressure range	Range code	Pressure range	Range code	Pressure range	Range code	Pressure range	Range code	Pressure range
1	0…0.1	11	0...3	21	0...200	31	0…1.6	41	-1…0.6
2	0...0.15	12	0...5	22	0...250	32	0…2.5	42	-1…1
3	0...0.2	13	0...10	23	0...300	33	0…4	43	-1…1.5
4	0...0.25	14	0...16	24	0...350	34	0…6	44	-1…3
5	0...0.3	15	0...25	25	0...400	35	0…10	45	-1…5
6	0...0.4	16	0...40	26	0...600	36	0…16	46	-1…9
7	0...0.5	17	0...60	27	0…0.25	37	0…25	47	-1…10
8	0...1	18	0...70	28	0…0.4	38	0.8…1.2	48	-1…15
9	0...2	19	0...100	29	0…0.6	39	-0.6…0	49	-1…20
10	0...2.5	20	0...160	30	0…1	40	-1…0	50	By Customized

Kindly according to your application select suitable range code , Example: Code 15 = 25 .
Unit of measure select on the Part Number Selection Table . Example: Code B=Bar , that's 25 bar .

2. Part Number Selection Table:

HPT200	H	15	B	G	E7	S9	3	N	1	002
Selection Type										
Electronic Connection	H= Hirchman DIN43650 EX= 1/2''NPT C8= Directly Outlet Cable C5= M12 (4-pin) Type G= LED digital display									
Pressure Range	Range reference to pressure range selection table code									
Pressure Units	B=Bar P=PSI K=kPa M=MPA H=mH2O F=mFuel									
Pressure type	G=Gage A=Absolute N=Negative									
Signal Output	E0= 1-5V (3 wires) E5= 4-20mA(2 wires) E6= 0-5V (3 wires) E7= 0-10V (3 wires) E8= 0.5-4.5V(3 wires) E11=RS485 Modbus RTU (4wires) E21=Double 4-20mA for P+T E22=4-20mA for P and Ω for T X= By Customized									
Power Supply	S3=24 V DC (Standard) S5=12 V DC (for E0 ,E5,E6) S6=5V DC (for E8) S9=15~30V DC (for E7) S10=12~30 V DC (for E5) S30=7~30V DC (for E5)									
Pressure connection	3= 1/4'' NPT male 6=G1/4'' male 7=G1/4"Female 8= M20x1.5 male 9=G1/2'' male 10 =1/2'' NPT male 26=1/4''-18 NPT Female X= By Customized									
Other option	C:Anti-Corrosion Type FD:Flush diaphragm O:Oxygen Services X:Withstand Xylene N:Standard Type FF:Fuel Filter									
Accuracy	1=0.5%F.S 2=0.25%F.S 3=0.1%F.S (high cost) 4=0.15%F.S									
Cable length	000=Non-Cable 001= Cable 1M 002= Cable 2M X= By Customized									

Accessories

(Notes: Purchased separately. For the price of accessories, please contact our sales.)

	Description	Order number
	Liquid level display control device With all kinds of liquid level sensor, measurement according to liquid level, and according to the setting of the container structure and size and the density of liquid, calculation, display liquid volume or quality.	0008
	Attached indicator for transmitters standard version for Ex version	0006
	Cooling device For thread attachment	0004
	Terminal box The terminal box, with IP 67 ingress protection and watertight ventilation element, provides a moisture-free electrical termination for the submersible pressure transmitter. It should be mounted in dry environment or directly in the switch cabinet.	0003

Order information

Model /Measuring range /Output Signal/Medium/Cable length/Case/Accessories

HOLYKELL TECHNOLOGY COMPANY LIMITED
•www.holykell.com•
•E-mail：admin@holykell.com
•Tel ： +86 731 89873265
•Fax： +86 731 89873265