TECHNOLOGY

HOLYKELL®

HPT703

PRESSURE

•DATASHEET•

1. Pressure Measurement 2. Level Measurement 3. Temperature Measurement
4. Flow Measurement 5. Display & Control Instruments

HPT 703

Standard Industry Air Micro-gas Pressure Transmitter

Applications

- Environmental contamination control
- Pipe pressure monitoring
- Medical equipment and devices
- Oven pressure boost and ventilation control
- Purification project
- Underground ventilation

Characters

- Min 0-25pa gas pressure sensitive
- Advanced digital temperature compensation.
- UL94V-0 flame retardant grade
- Anti-humidity and water proof
- IP65 enclosure
- ia Ⅱ CT4 explosion-proof grade optional
- CE approving

Profiles

HPT703 micro-gas pressure transmitter is precision engineered for monitoring differential pressure of air and gases or gauge pressure in commercial and OEM applications and liquids with 0.25% accuracy.

Our low range micro-gas pressure transmitter provides an accurate solution for low pressure sensing with ranges available from 0-250pa to 0-25Kpa. With SETRA variable capacitance sensing technology and argon arc welded sensitive components, its advanced circuit linearity and temperature compensation technology makes better transmitter performance.It is compact with stable structure and light weight; easy to install and use. It is suitable for the pressure or differential pressure measurement of various dry and non-corrosive gases with high measurement accuracy. It is widely used in many fields such as electric power, environmental protection, dust removal, textile, leak detection and etc.

The installation of the micro-gas pressure transducer is very simple. The user can choose to fix it with Ø3mm screws.

Measuring range

Measuring range	
bar	0 to 0.005...0.01 to 5
Kpa	0 to 0.05.....1 to 500
psi	0 to 0.5.....10 to 5000
mH2O	0 to 50 1000 to 500000

The measuring ranges are also available in Mpa,Pa,in Hg,mm Hg.

Specifications

Ambient Temperature: 25°C (unless specified)

Parameter	HPT703				
Pressure Range	0-100pa, -100-100kpa,0~200Kpa				
Safe overload	200% F.S.				
Burst Pressure	300% F.S.				
Accuracy(Linearity hysteresis repeatability)	0.25%F.S 0.4%F.S 1%F.S Optional				
Long Time Stability	Standard: 0.25%F.S				
Working Temp	-18℃~+65℃				
Storage Temp	-54℃~+82℃				
Temperature compensation	5℃~65℃				
Zero Point Temp Drift	< 0.06%F.S/℃				
Full Scale Temp Drift	< 0.06%F.S/℃				
Zero Error	≤±0.5%F.S				
Total Error	≤±0.75%F.S				
Medium compatible	Air or non-conductive gas				
Electronic Wire	2 Wires		3 Wires		
Output	RS485	0~5V	0~10 V	0.5-4.5V	optional
Power Supply	24~30 V DC				
Electronic connection	PG-9 or PG-13.5 cable locking device or 1/2" wire opening				
Pressure connect port	3/16" gas mouth with 1/4" hose, Ø8 gas mouth, or M10 thread				
Response time	< 1s				
Adjustment	Support local zero and span calibration				
Pressure Type EMC	Differential Pressure (Gage pressure)				
Standard	Approving				
Weight	347.5g				

Dimensions and Drawing

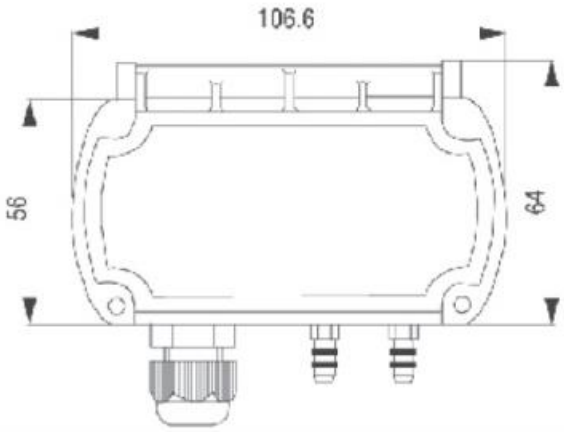

Front View

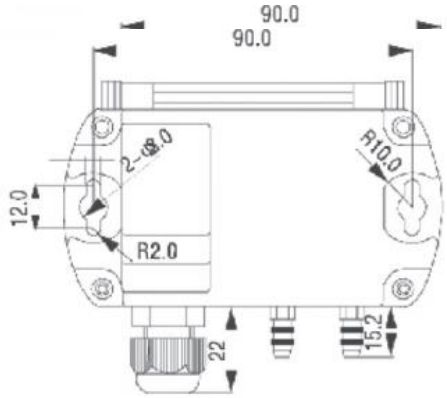

Rear View

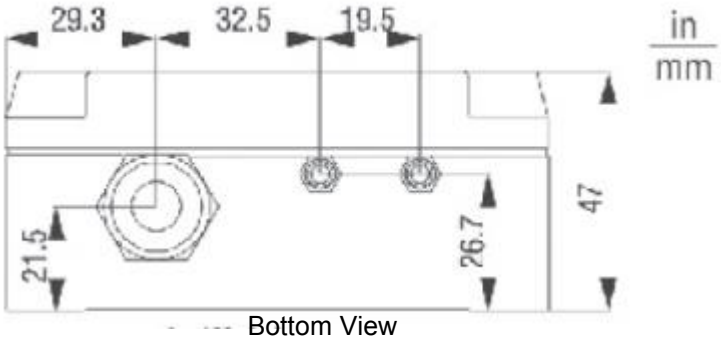

Bottom View

How to Order

1. Pressure Range Selection Table:

01	0~100Pa	07	0~400Pa	13	0~900Pa	19	0~10kPa	25	0~200kPa	31	-50~50Pa	37	-200~200Pa	43	-10~10KPa	47	-100~250KPa
02	0~150Pa	08	0~450Pa	14	0~1000Pa	20	0~20kPa	26	0~250kPa	32	-100~0Pa	38	-300~300Pa	44	-50~50KPa	48	-100~500KPa
03	0~200Pa	09	0~500Pa	15	0~2kPa	21	0~30kPa	27	0~300kPa	33	-100~100Pa	39	-500~500Pa	45	-100~100KPa	49	-100~1000KPa
04	0~250Pa	10	0~600Pa	16	0~3kPa	22	0~50kPa	28	0~500kPa	34	-150~0Pa	40	-1~1KPa	46	-100~200KPa		
05	0~300Pa	11	0~700Pa	17	0~4kPa	23	0~100kPa	29	0~1000kPa	35	-150~150Pa	41	-2~2KPa	X	By Customized		
06	0~350Pa	12	0~800Pa	18	0~5kPa	24	0~150kPa	30	-50~0Pa	36	-200~0Pa	42	-5~5KPa				

Kindly according to your application select suitable range code , Example: Code 16 =3kPa .
Unit of measure select on the Part Number Selection Table . Example: Code K=kPa , that's 3 kPa.

2. Part Number Selection Table:

HPT703 Selection Type	**14**	**A**	**E5**	**S10**	**22**	**P1**	**1**	**000**
Pressure range	Range reference to pressure range selection table code.							
Pressure unit	A=Pa K=kPa H=mH2O							
Signal output	E0= 1-5V (3 wires) E5= 4-20mA(2 wires) E6= 0-5V (3 wires) E8= 0.5-4.5 V (3 wires) E9=RS485 X= By Customized							
Power supply	S10=24~30V DC							
Pressure connection	11=M10 male thread 22=Ø6 gas mouth 32=3/16" gas mouth with 1/4" hose X= By Customized							
Max static pressure	P1 Standard by DP Range P2 High Static Pressure Type X By Customized							
Accuracy	1=1%F.S 2=0.5%F.S 3=0.25%F.S							
Cable length	000=Non-Cable 001= Cable 0.7M 002= Cable 2M X= By Customized							

Accessories

	Description	Order number
	Liquid level display control device With all kinds of liquid level sensor, measurement according to liquid level, and according to the setting of the container structure and size and the density of liquid, calculation, display liquid volume or quality.	0008
	NPT adapter The 316 SS G1/2 adapter replaces the removable protective cap and converts the threads to 1/2”NPT male external, 1/4” female internal threads.	0001
	Attached indicator for transmitters Standard version for Ex version	0006
	Adapter Converter It is able to convert RS-232 signal to RS-485 balanced differential signal and extend the communication distance to 1.2km.It uses a particular pump to gain power from RS-232 signal (RTS, DTR, TXD) without initializing the RS-232 series interface.This interface converter does this without requiring any AC or DC power	0005
	Terminal box The terminal box, with IP 67 ingress protection and watertight ventilation element, provides a moisture-free electrical termination for the submersible pressure transmitter. It should be mounted in dry environment or directly in the switch cabinet.	0003

Order information

Model /Measuring range /Output Signal/Medium/Cable length/Case/Accessories

HOLYKELL TECHNOLOGY COMPANY LIMITED
•www.holykell.com•
•E-mail：admin@holykell.com
•Tel ： +86 731 89873265
•Fax ： +86 731 89873265