TECHNOLOGY

HOLYKELL®

USER MANUAL

RADAR LEVEL SENSOR

HOLYKEEL .COM

1. Product overview

Sensor is 26G High Frequency radar level measurement instrument, measure the maximum distance to 70 meters. Antenna being further optimized, fast new microprocessor could be higher-speed signals processing, makes the instrument can be used in reactors, solid-state storage bin and some complicated measuring conditions.

1.1 Principle

Radar antenna send narrow microwave pulses and pass antenna transfer downward. Microwaves reflected back into contact with the surface being measured, only to be again received by the antenna system will automatically transmit signals to the electronic circuit part converts position signal (because the microwaves spread extremely quickly, reaches its destination and return receiver by reflection of electromagnetic waves it back and forth the length of time is almost instantaneous).

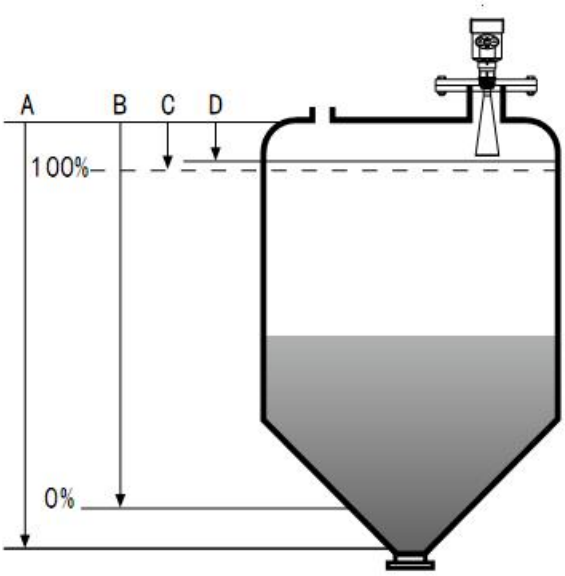

A Setting Range

B Lower position adjustment

C Higher position adjustment

D Blind Zone Span

Measurement of the Datum is: Bottom surface of thread or seal surface of flanges.

Note: when use of radar level meter, please make sure the highest level not enter blind zone of measurement (likes picture show D zone.)

1.2 26G Radar Level Meter Features:

Antenna size is small, easy to install; non-contact radar, no abrasion, no pollution. Which is almost not influenced by corrosion and foam. And virtually unaffected by water vapor, temperature and pressure changes in the atmosphere.

Serious dust environment has little effect on high frequency level meter. Shorter wavelength, and has a better reflection on inclined solid surface. Beam angle, energy concentration, while enhanced echo

and to avoid the interference. Measure blind spots smaller canisters measure will achieve good results.

The low noise ratio, even in case of fluctuations can get better performance.

High frequency is the best choice for measuring solids and low dielectric constant.

2. Instrument Introduction

HR261

Application: All kinds of corrosive liquids

Measurement Span: 0 to 20 meters

Process Connection: Thread or Flanges

Medium Temperature Span: -40～120℃

Process Pressure: -1Bar～3 Bar

Accuracy: ±5 mm

Proof Grade: IP67

Supply: DC24V or 85-265VAC

The Frequency Span: up to 26G Hz

Explosion proof grade: Exib ⅡCT6 Gb

Signal Output: 4...20mA/HART (2 wires/4 wires)
RS485/Modbus

H**R262**

Application: Temperature resistant, pressure resistant, slightly corrosive liquids.

Measurement Span: 0 to 30 meters

12m/15meters (powder);18m/20m(particle); 22m/25m(lump materials)

Process Connection: G1-1/2" Thread or Flanges

Medium Temperature Span: -40～150℃

Process Pressure: -1Bar～40 Bar (Thread and Flat flange)
-1Bar～1 Bar (Multidirectional flange)

Accuracy: ±3mm; Proof Grade: IP67

Supply: DC24V or 85-265VAC

The Frequency Span: up to 26G Hz

Explosion proof grade: Exib ⅡCT6 Gb

Signal Output: 4...20mA/HART (2 wires/4 wires)
RS485/Modbus

HOLYKELL TECHNOLOGY COMPANY LIMITED TEL: +86-731-89873265 / 89975636 / 89975645 FAX: +86-731-89873646

HR263

Application: Solid material, process container or strong dust(with purging function), easy to crystallize and show fields.

Measurement Span: 15m/20m/35m (powder);
20m/30m/45m (particle);
35m/45m/55m(lump materials)
0-1m...70m(liquids)

Process Connection: Multidirectional flange

Medium Temperature Span: -40～250℃

Process Pressure: -1Bar～1 Bar

Accuracy: ±15mm

Proof Grade: IP67

Supply: DC24V or 85-265VAC

The Frequency Span: up to 26G Hz

Explosion proof grade: Exib Ⅱ CT6 Gb

Signal Output: 4...20mA/HART (2 wires/4 wires)
RS485/Modbus

HR264 (Parabolic antenna)

Application: Solid material, strong dust, easy to crystallization, condensation occasions

Measurement Span:50m (powder);70m(particle);70m(lump materials)

Process Connection: Multidirectional flange

Medium Temperature Span: -40～250℃

Process Pressure: -1Bar～1 Bar

Accuracy: ±15mm

Proof Grade: IP67

Supply: DC24V or 85-265VAC

The Frequency Span: up to 26G Hz

Explosion proof grade: Exib Ⅱ CT6 Gb

Signal Output: 4...20mA/HART (2 wires/4 wires)
RS485/Modbus

HR265

Application: It is suitable for monitoring the water level of lakes, river courses, reservoirs, open channels, tidal water level, water level of Bridges, and water level in low-lying areas of cities.

Features: high precision; Strong anti-interference ability, not affected by temperature, humidity and wind power; Simple installation and debugging; Low power consumption.

Measurement Span: 0 to 70 meters

Process Connection: PP/Stainless steel Bracket

Medium Temperature Span: -40～100℃

Process Pressure: -1Bar～1 Bar

Accuracy: ±5mm

Proof Grade: IP67

Supply: DC24V (RS485 is 6-24Vdc supply)

The Frequency Span: up to 26G Hz

Explosion proof grade: Exib ⅡCT6 Gb

Signal Output: 4...20mA/HART (2 wires/4 wires)
RS485/Modbus

HR266

Application: Liquid, slurry, condensation, corrosive liquids.

Measurement Span: 0 to 20 meters

Process Connection: Thread or Flanges

Medium Temperature Span: -40～150℃

Process Pressure: -1Bar～1 Bar (Atmospheric)

Accuracy: ±3 mm

Proof Grade: IP67

Supply: DC24V or 85-265VAC

The Frequency Span: up to 26G Hz

Explosion proof grade: Exib ⅡCT6 Gb

Signal Output: 4...20mA/HART (2 wires/4 wires)
RS485/Modbus

HOLYKELL TECHNOLOGY COMPANY LIMITED TEL: +86-731-89873265 / 89975636 / 89975645 FAX: +86-731-89873646

3. The Installation Requirements

Installation Guide

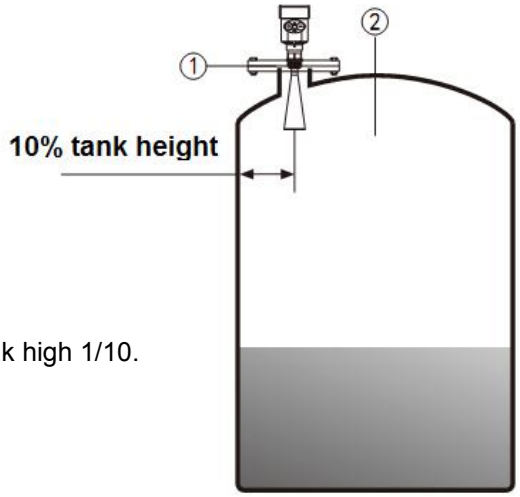

Installed in the 1/4 or 1/6 diameter of tank.

Note: the minimum distance from the tank wall should be tank high 1/10.

Note: ① base level ②Container central or axis of symmetry

Conical tank top faces, can be installed in the Middle top,
Ensures that the measurement to the bottom cone.

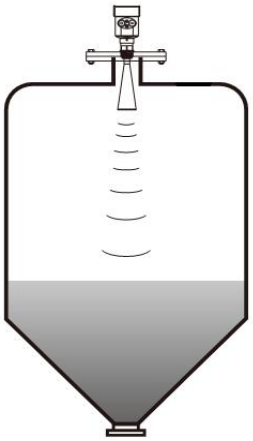

When there is a stack, the antenna should Vertical alignment the surface of medium. If the surface is not flat, stack angle big, you should use multidirectional flange installation and let's meter Bell mouse face the surface of medium. (due to the solid surface tilt will cause echo attenuation, even loss of signal problem)

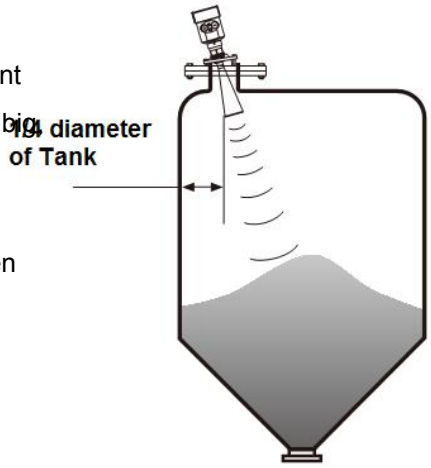

Tapered tank cannot be installed on the top of the feeding mouth.

Also note: outdoor installation should be taken sunshade,
Rainproof measures.

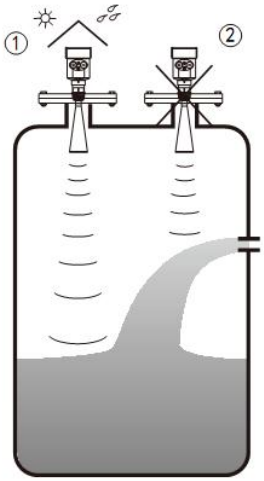

① Right ② wrong

The instrument cannot be installed in the middle of an arch or a circular tank top. In addition to produce indirect echo is also affected by the echoes. Multiple echo can be larger than the true value of signal echo, because through the top can concentrate multiple echo. So cannot be installed in the central position.

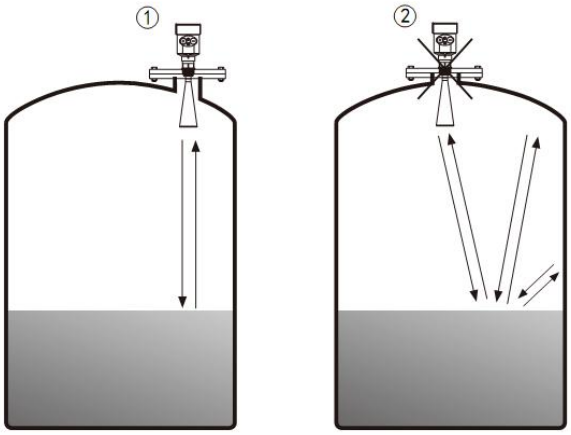

When the tank obstacles affect the measurement, install a reflection plate for the normal measurement.

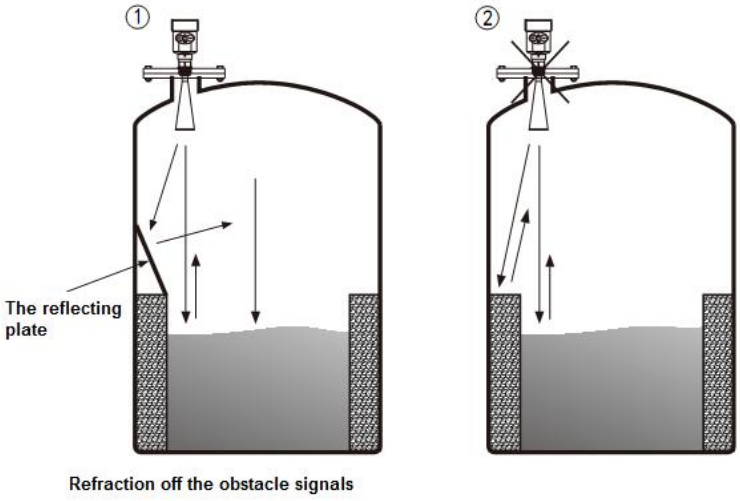

① right ② wrong

HOLYKELL TECHNOLOGY COMPANY LIMITED TEL: +86-731-89873265 / 89975636 / 89975645 FAX: +86-731-89873646

Connect Tube Height: ensure that the antenna extends into the tank at least 10 mm distance

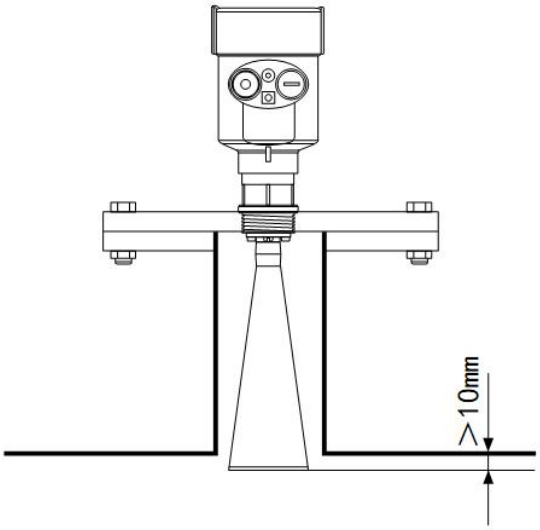

4. Electronic Connection

Power Supply

(4～20) mA/HART（2 wires） The power supply and the output current signal sharing a two core shield cable. The specific power supply voltage range of see technical data. For intrinsically safe type must be added a safety barrier between the power supply and the instrument.

(4～20) mA/HART（4 wires） Separate power supply and current signals, respectively using a cable. The specific power supply voltage range of see technical data.

RS485/Modbus Power supply and Modbus signal lines separated respectively using a shielded cable, the specific power supply voltage range of see technical data.

Connection Wires:

24V two wire wiring diagram as follows:

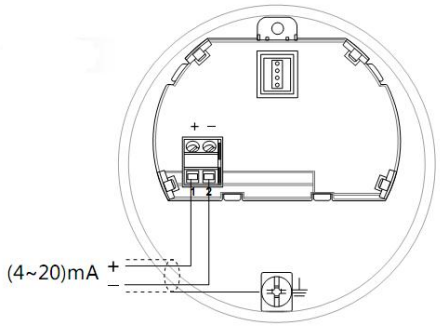

220V four wire connection as shown below:

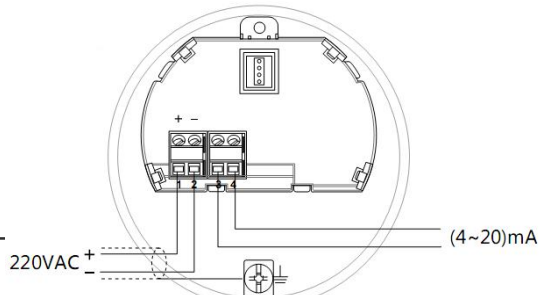

24V RS485/Modbus wiring diagram as follows:

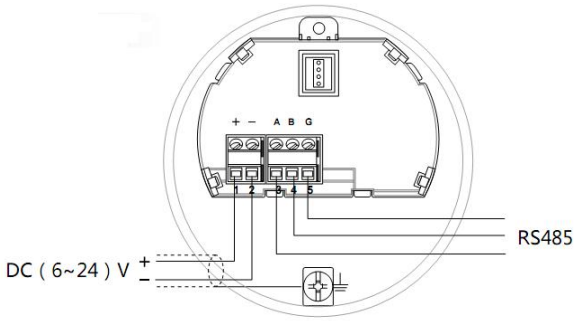

Safety instructions

Please observe the local electrical installation requirements!

Please comply with local requirements for personnel health and safety rules. All of the instrument electrical parts operation must be completed by training professionals.

Please check the instrument nameplate to ensure product specifications meet your requirements. Please make sure that the power supply voltage and instrument nameplate requirements.

Protection grade

This instrument fully meet the requirements of protection grade IP66/67, please make sure that the waterproof sealed cable head. The following diagram:

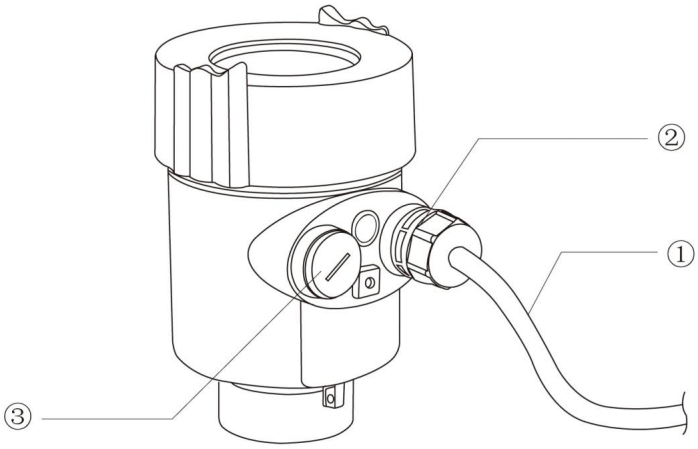

How to ensure that the installation to meet the requirements of IP67

Please make sure that the sealing head is not damaged.

Make sure that the cable is not damaged.

Make sure the cable is used with electrical connection specification.

After entering the electrical interface front, the cable bending downward, to ensure that the water cannot flow into the shell, see the ①

HOLYKELL TECHNOLOGY COMPANY LIMITED TEL: +86-731-89873265 / 89975636 / 89975645 FAX: +86-731-89873646

Tighten the cable sealing head, see the ②

Please electrical interface will not use by blind wall tightly, see the ③

5. Instrument Commissioning

Three kinds of debugging method:

Display / key

PC debugging

HART handheld programmer

By showing the 4 buttons on the screen of the instrument for debugging. Debug menu languages. After debugging, generally used only for display, through the glass window can be clearly read measured value.

Display/Keys

①LCD display
② Keys

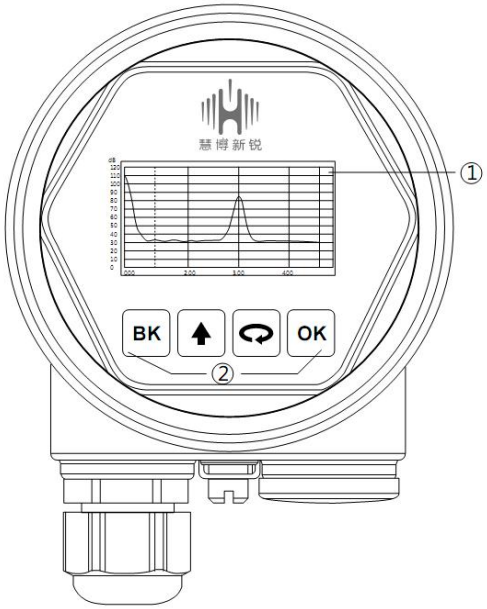

PC debugging

Connected with the host computer through the HART

①The RS232 interface or USB interface
②The radar level meter
③ The HART adapter
④ The 250 resistor

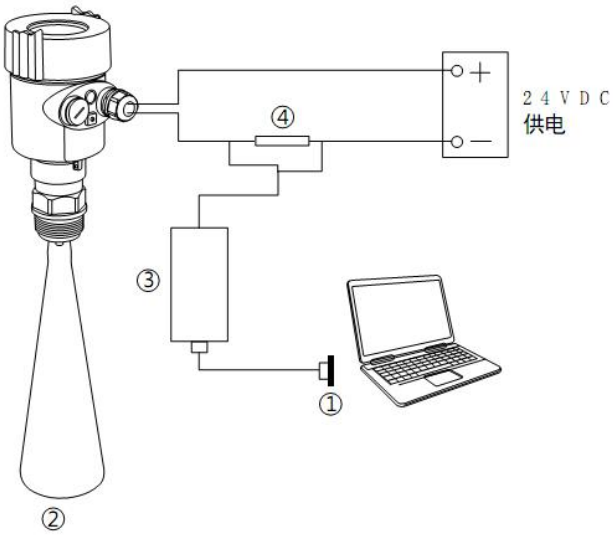

HART handheld programmer

① The HART handheld programmer

② The radar level meter

③ The 250 resistor

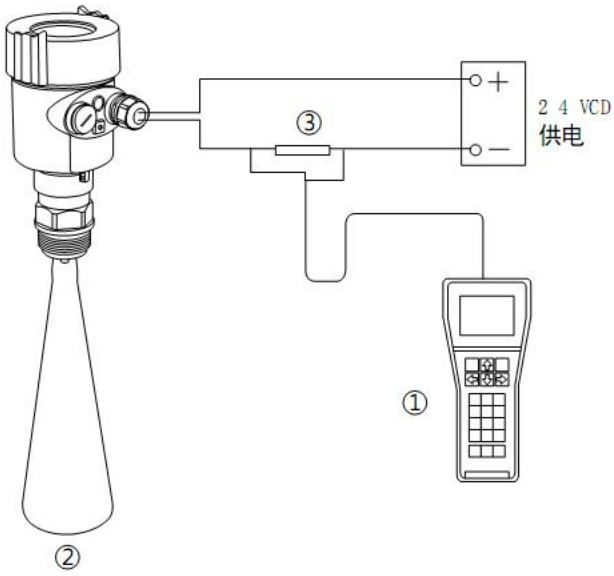

6. The Structure Size, Unit: mm

Housing:

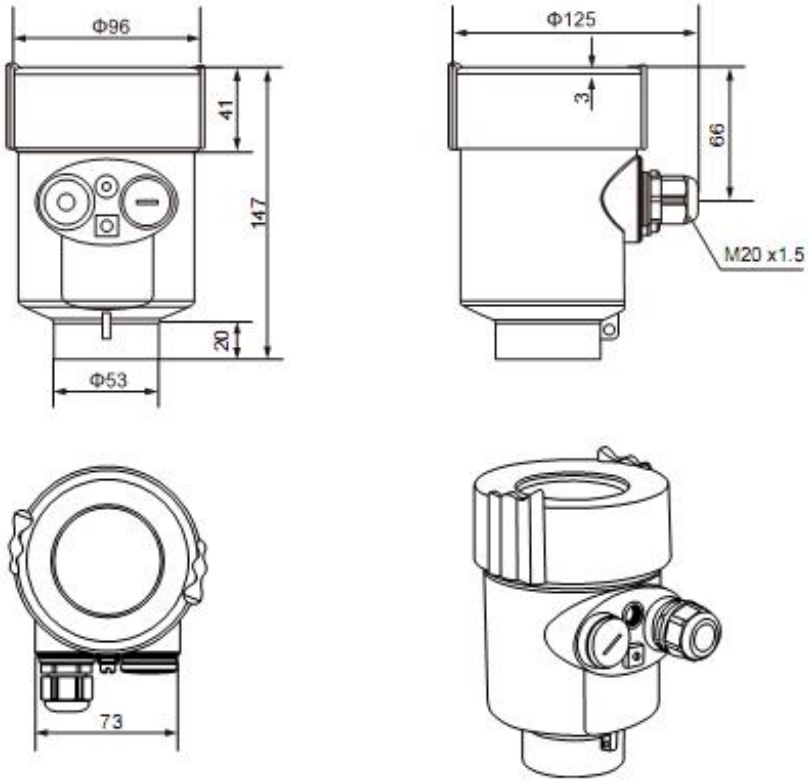

HOLYKELL TECHNOLOGY COMPANY LIMITED TEL: +86-731-89873265 / 89975636 / 89975645 FAX: +86-731-89873646

Diemension:

HR261

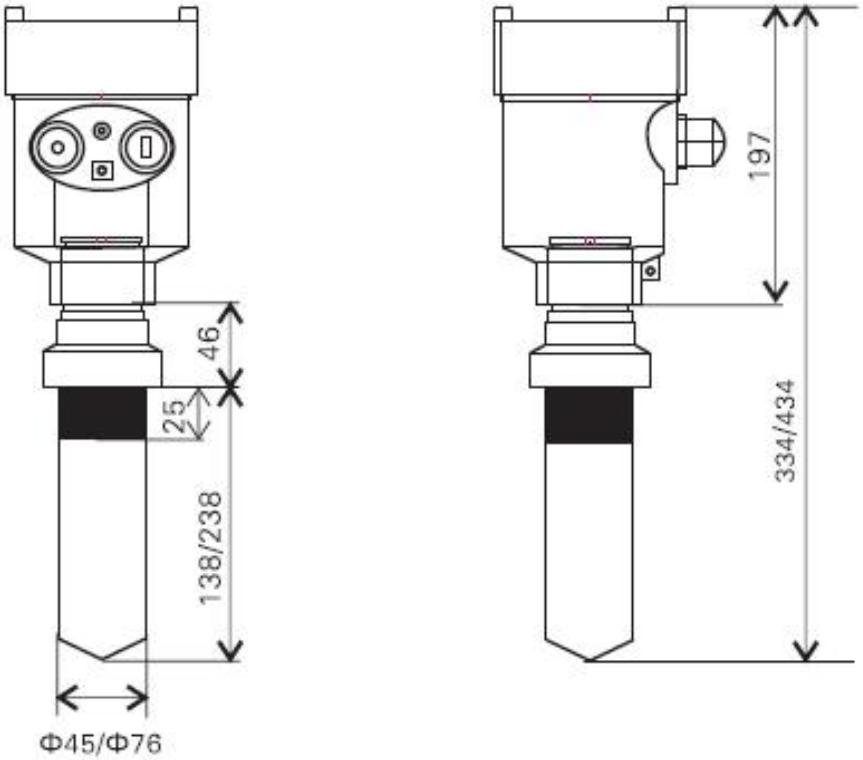

Installation Drawing:

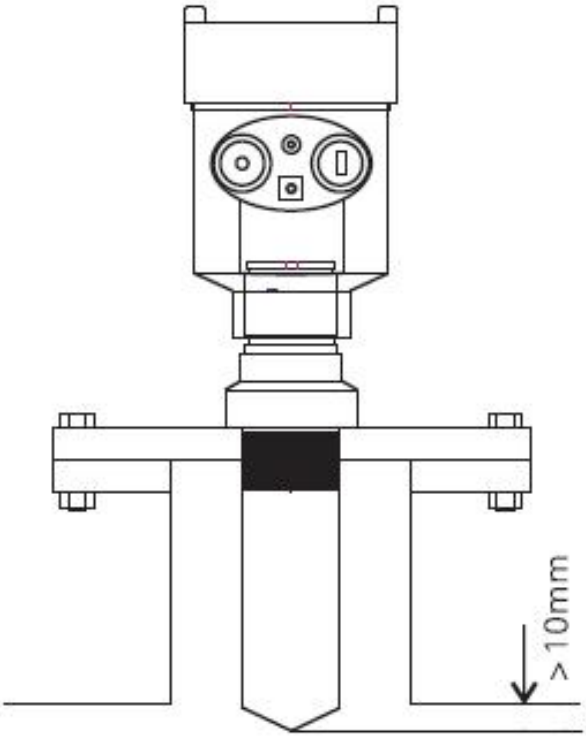

HR262

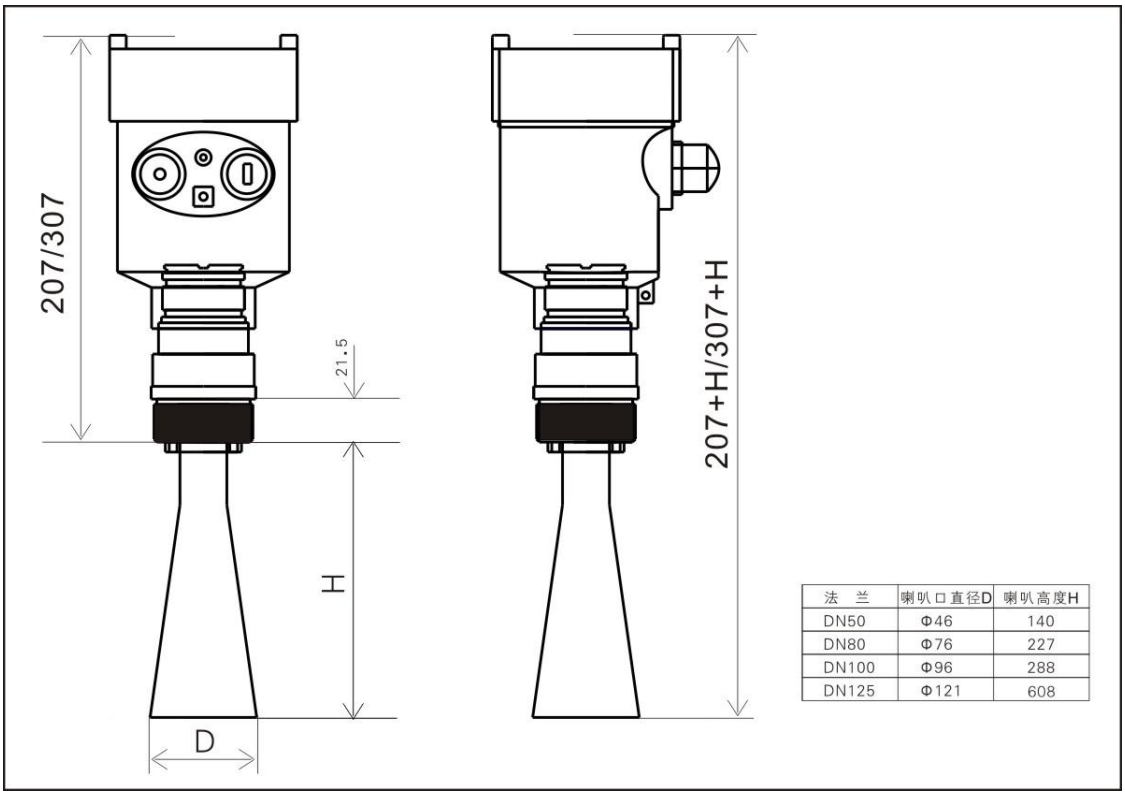

法 兰	喇叭口直径D	喇叭高度H
DN50	Φ46	140
DN80	Φ76	227
DN100	Φ96	288
DN125	Φ121	608

Installation Drawing:

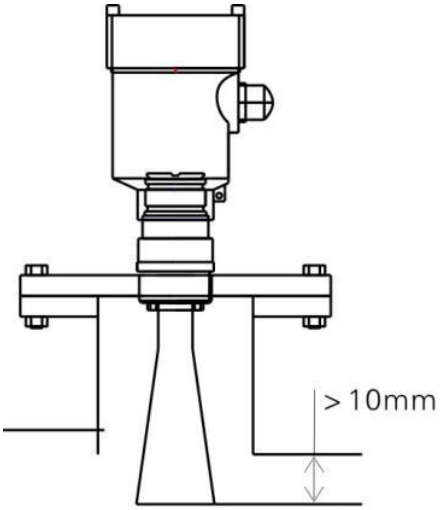

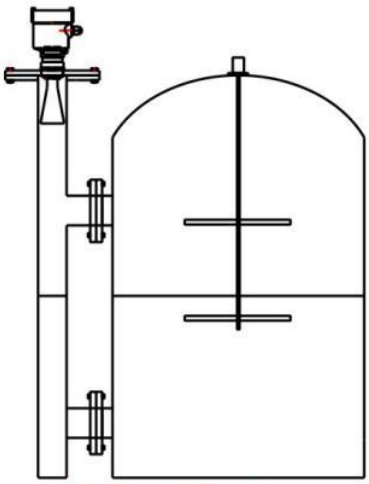

Use for Side conduit Tube Measurement
用于旁通管中测量

Use for guide pipe mounting measurement
用于导波管中测量

HOLYKELL TECHNOLOGY COMPANY LIMITED TEL: +86-731-89873265 / 89975636 / 89975645 FAX: +86-731-89873646

HR263

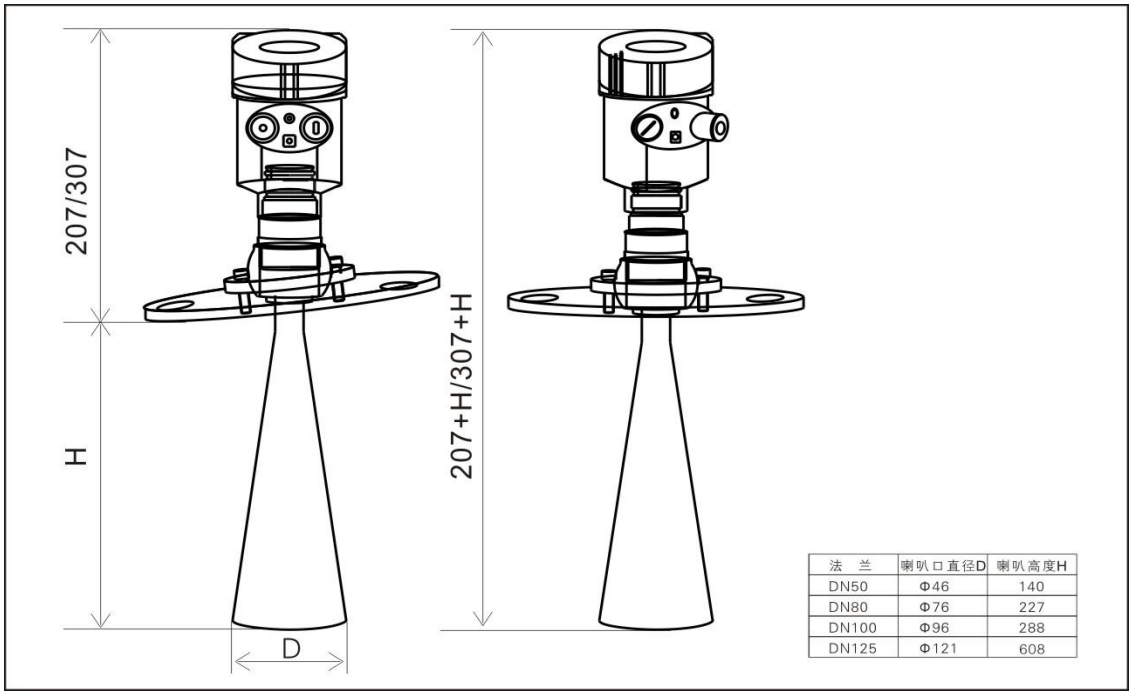

法 兰	喇叭口直径D	喇叭高度H
DN50	Φ46	140
DN80	Φ76	227
DN100	Φ96	288
DN125	Φ121	608

Installation Drawing:

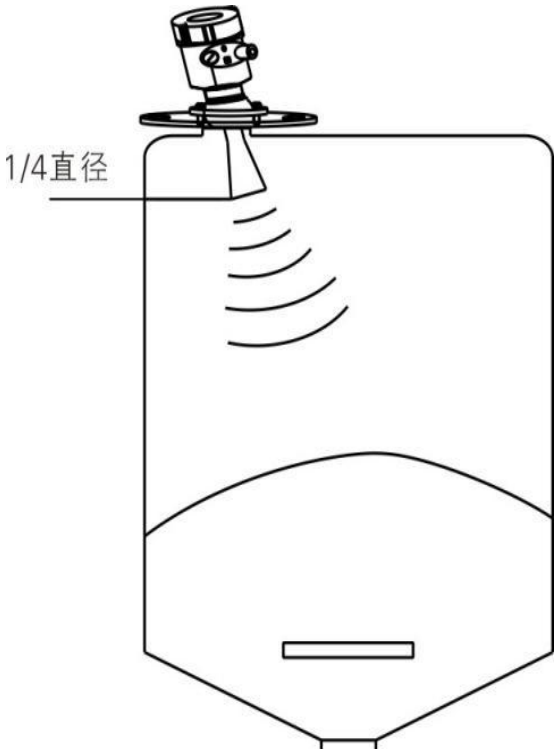

HR264

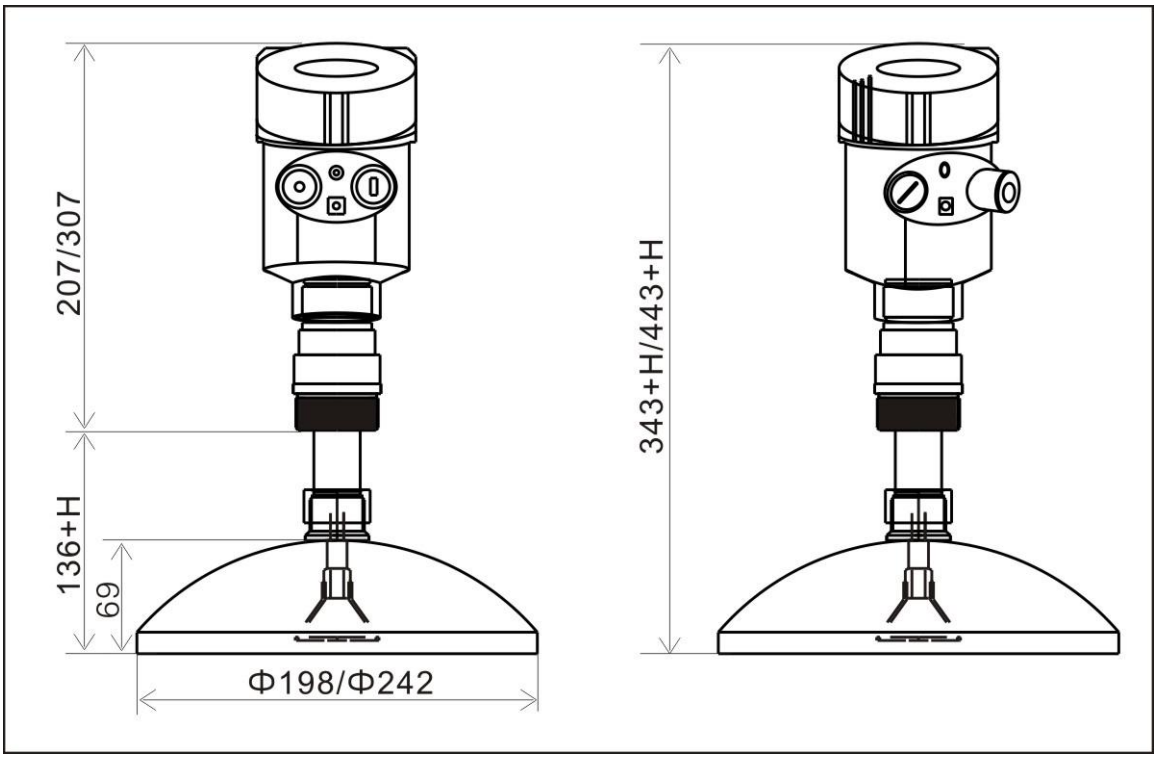

Installation Drawing:

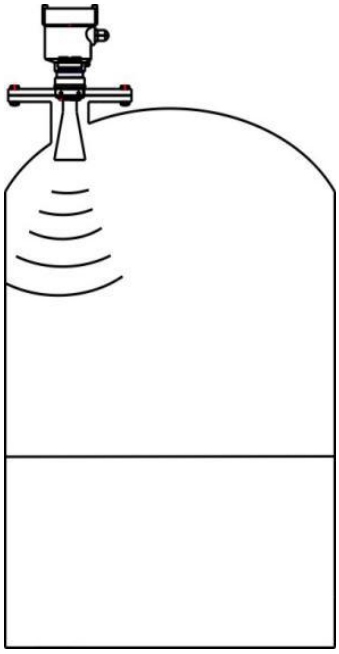

HOLYKELL TECHNOLOGY COMPANY LIMITED TEL: +86-731-89873265 / 89975636 / 89975645 FAX: +86-731-89873646

HR265

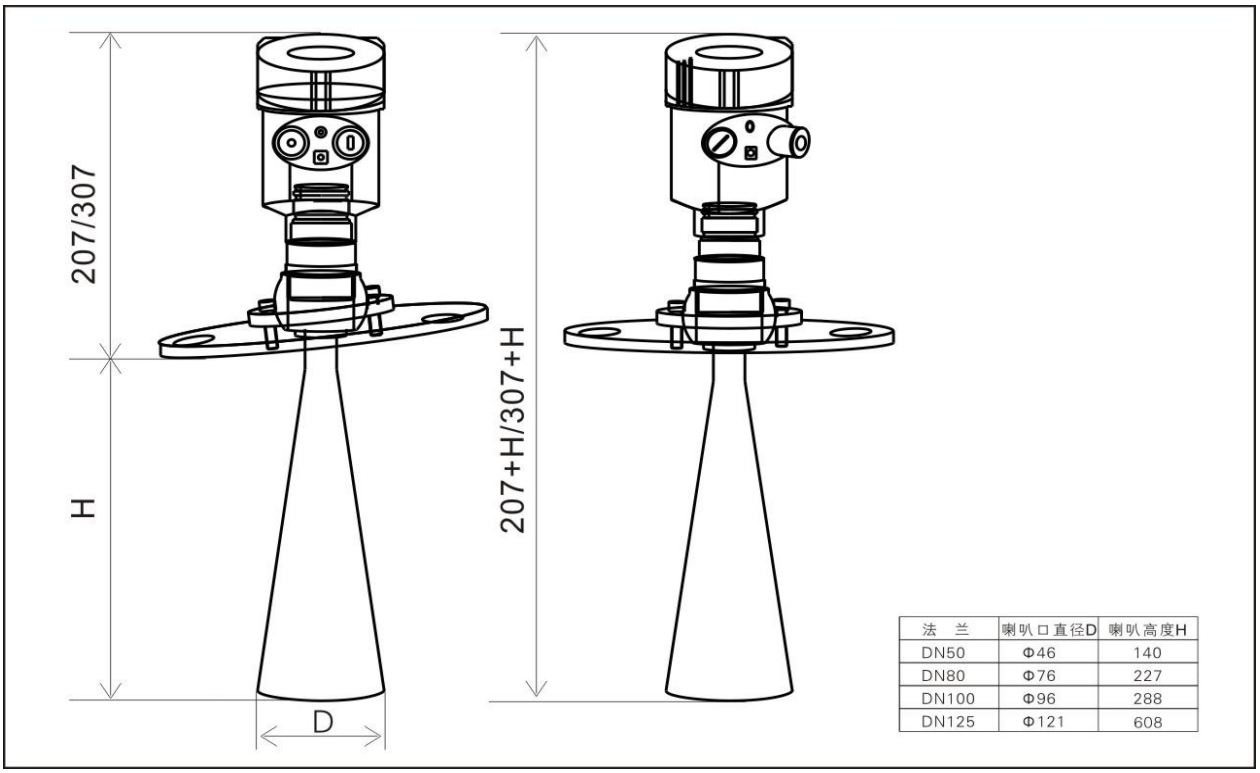

法　兰	喇叭口直径D	喇叭高度H
DN50	Φ46	140
DN80	Φ76	227
DN100	Φ96	288
DN125	Φ121	608

HR266

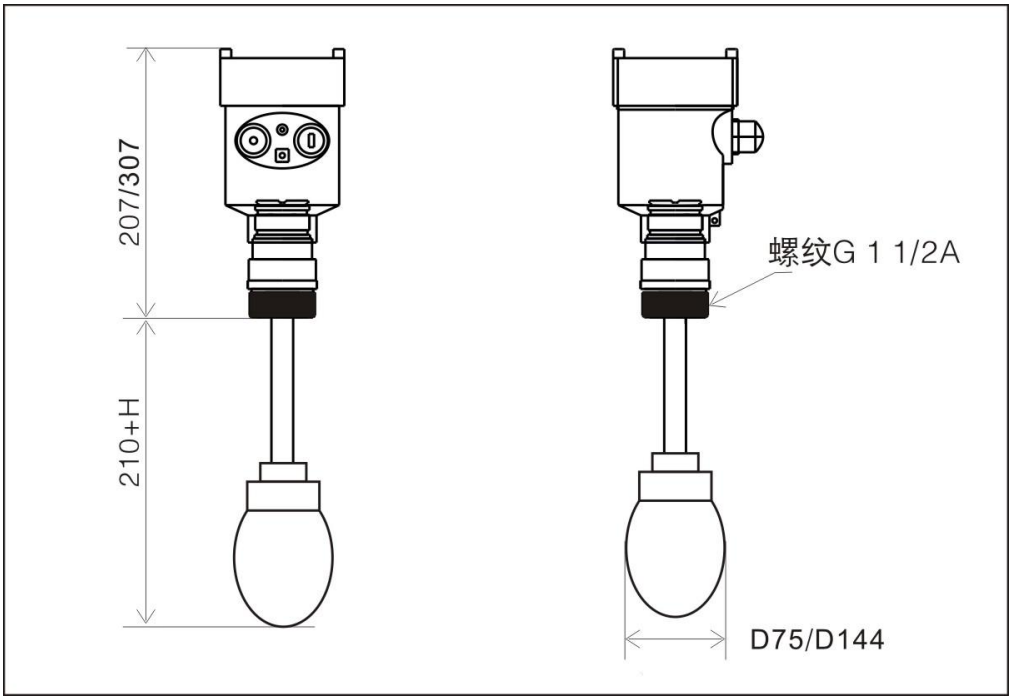

Installation Drawing:

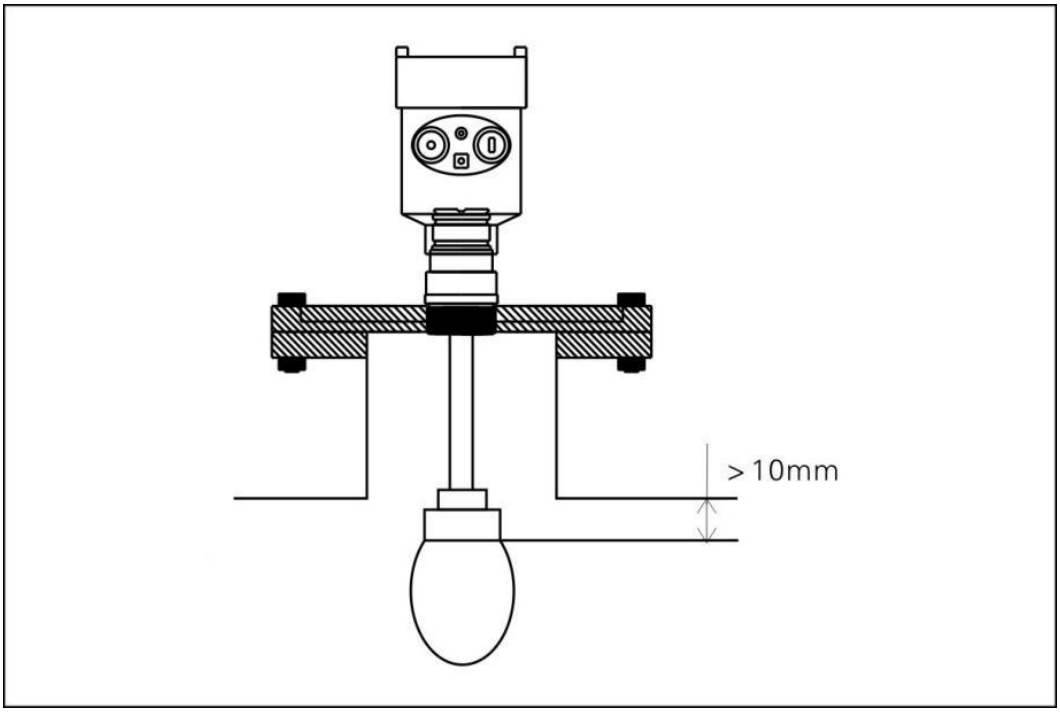

Flange Selection:

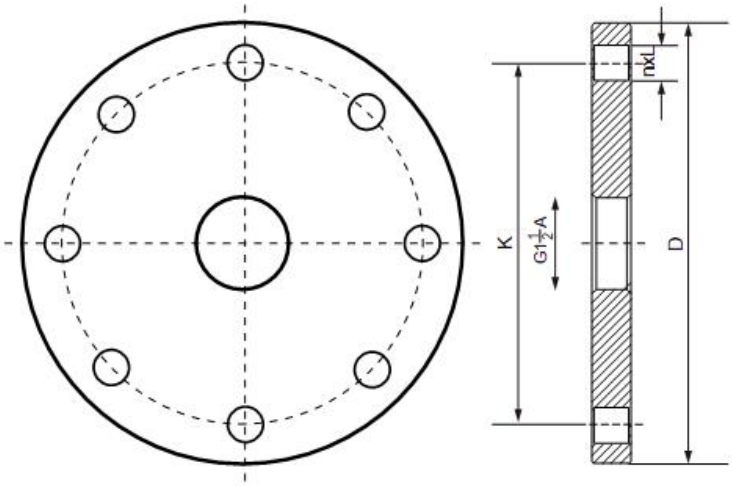

Spec	D	K	n	L
DN50	Φ165	Φ125	4	18
DN80	Φ200	Φ160	8	18
DN100	Φ220	Φ180	8	18
DN125	Φ250	Φ210	8	18
DN150	Φ285	Φ240	8	22
DN200	Φ340	Φ295	12	22
DN250	Φ405	Φ355	12	26

HOLYKELL TECHNOLOGY COMPANY LIMITED TEL: +86-731-89873265 / 89975636 / 89975645 FAX: +86-731-89873646

7. The Technical Parameters

Housing:

The seal between the shell and the shell cover	Silicone rubber
Window of housing	Polycarbonate

The ground terminal	stainless steel

Power Supply

2 wires type:	standard type	(16～26) V DC
	Intrinsic safety type	(21. 6～26. 4) V DC
	Consumption	max 22. 5mA / 1W
	Allowable ripple	
	- <100Hz	Uss<lV
	- (100～100K) Hz	Uss<l0mV

The Cable parameters	Cable entrance / plug the M20xl.5 cable entrance
	Terminal conductor cross section 1.0 mm^2

Output parameters:

Signal output:	(4～20) mA
Communication Protocol:	HART
Resolution:	1. 6u A
The fault signal	current output unchanged 20. 5mA 22mA；3.9mA
The integral time	(0～50)s adjustable

Blind Zone	the ends of the antenna
The max measuring distance	30 meters
Microwave frequency	26GHz
The communication interface:	HART communication protocol
The measurement interval	about 1 second (depending on the parameter settings)
Adjust time	about 1 second (depending on the parameter settings)
Display resolution	1 mm
Working storage and transportation temperature	(-40～100) ℃
Process temperature (the temperature of the antenna part)	(-40～250)℃
Pressure	Max. 40Bar
shock-proof	Mechanical vibration l0m/s² , (10～150)Hz

8. Linear Instruments

HR261

Emission angle	20°
Accuracy	sees below picture

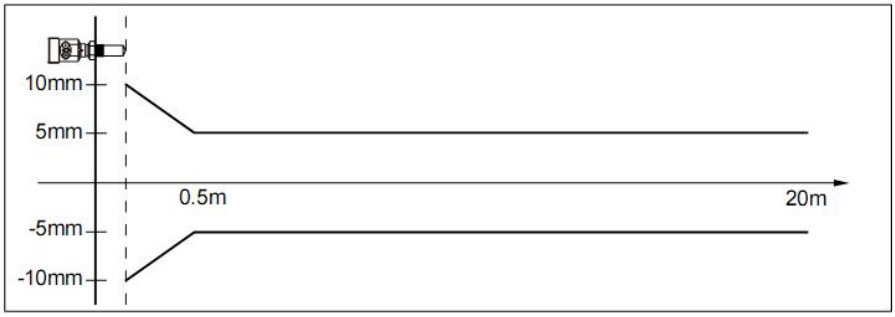

HR262

Emission angle	Depending on the size of the antenna
-¢46mm	18°
-¢76mm	12°
-¢96mm	8°
Accuracy	sees below picture

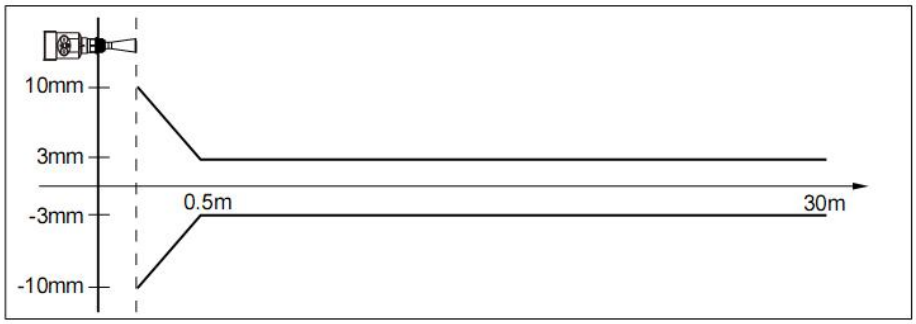

HR263

Emission angle	Depending on the size of the antenna
-¢76mm	12°
-¢96mm	8°
-¢121mm	6°
Accuracy	sees below picture

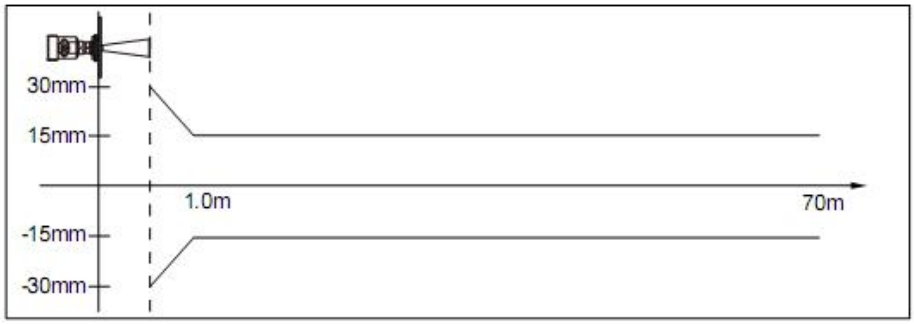

HOLYKELL TECHNOLOGY COMPANY LIMITED TEL: +86-731-89873265 / 89975636 / 89975645 FAX: +86-731-89873646

HR264

Emission angle	Depending on the size of the antenna
-℄ 196mm	4°
-℄ 242mm	4°
Accuracy	sees below picture

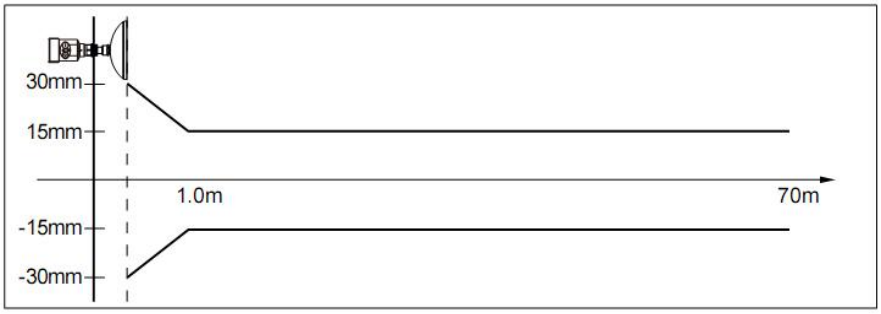

HR265

Emission angle	Depending on the size of the antenna
-℄ 76mm	12°
-℄ 96mm	8°
-℄ 121mm	6°
Accuracy	sees below picture

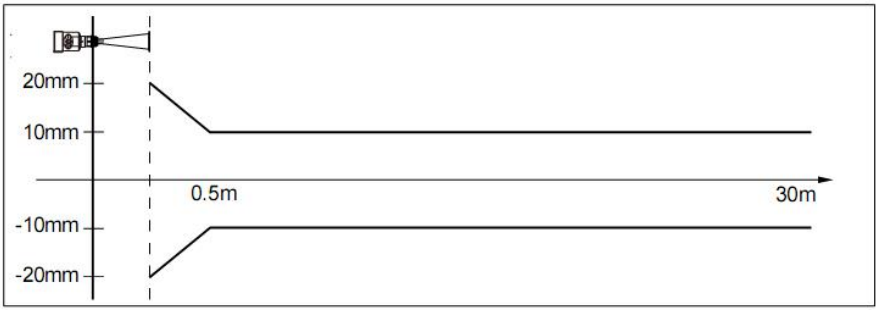

HR266

Emission angle	Depending on the size of the antenna
-℄ 46mm	18°
-℄ 76mm	12°
-℄ 96mm	8°
Accuracy	sees below picture

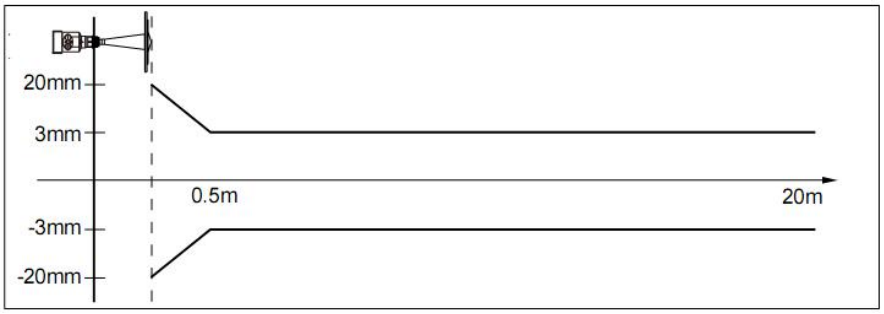

9. Instrument Model Codes Selection Table

HR261

Type

P Standard Type（Non explosion proof）

I Intrinsic safety type (Exib IIC T6 Gb)

D Flameproof and Intrinsic safety types (Exd [ib] /Exib IIC T6 Gb)

Antenna type / materials

F Sealing horn / PTFE (-40~120℃)

Process connection / materials

G Thread G1½ A

N Thread 1½ NPT

A Flange DN50/PP

B Flange DN80/PP

C Flange DN100/PP

Y specially customized

Electronic Output

2 （4~20）mA/24V DC 2 wires

3 （4~20）mA/24V DC/HART 2 wires

4 （4~20）mA/220V AC/4 wires

5 RS485/Modbus

Housing/ Proof Grade

L Aluminum /IP67

G Stainless Steel 304/IP67

Cable Conduit Port

M M20 x l. 5

N ½ NPT

Local Display/ Programming

A Yes

X No

HOLYKELL TECHNOLOGY COMPANY LIMITED TEL: +86-731-89873265 / 89975636 / 89975645 FAX: +86-731-89873646

HR262

Type

P Standard Type（Non explosion proof）

I Intrinsic safety type (Exib IIC T6 Gb)

D Flameproof and Intrinsic safety types (Exd [ib] /Exib IIC T6 Gb)

Process connection / materials

G Thread G1½ A/Stainless Steel 304

N Thread 1½ NPT/Stainless Steel 304

A Flange DN50/Stainless Steel 304

B Flange DN80/Stainless Steel 304

C Flange DN100/Stainless Steel 304

D FlangeDN125/Stainless Steel 304

E FlangeDN150/Stainless Steel 304

Y Specially Customized

Antenna type / materials

A Horn antenna Φ46mm/Stainless Steel 304

B Horn antenna Φ76mm/Stainless Steel 304

C Horn antenna Φ96mm/Stainless Steel 304

Y Specially Customized

Sealing/Process Temp

V Common Sealing/（-40~150）℃

K High Temp Sealing/（-40~250）℃

Electronic Output

2 （4~20）mA/24V DC 2 wires

3 （4~20）mA/24V DC/HART 2 wires

4 （4~20）mA/220V AC/4 wires

5 RS485/Modbus

Housing/ Proof Grade

L Aluminum/IP67

G Stainless Steel304/IP67

Cable Conduit Port

M M20 x l. 5

N ½ NPT

Local Display/ Programming

A Yes

X No

HR263

Type

P Standard Type（Non explosion proof）

I Intrinsic safety type (Exib IIC T6 Gb)

D Flameproof and Intrinsic safety types (Exd [ib] /Exib IIC T6 Gb)

Process connection / materials

G Thread G1½ A/Stainless Steel 304

N Thread 1½ NPT/Stainless Steel 304

B Flange DN80/Stainless Steel 304

C Flange DN100/Stainless Steel 304

D FlangeDN125/Stainless Steel 304

E FlangeDN150/Stainless Steel 304

F Flange DN200/Stainless Steel 304

H Flange DN250/Stainless Steel 304

M Flange DN80/Multidirection/Stainless Steel 304

K Flange DN100/Multidirection/Stainless Steel 304

T Flange DN125/Multidirection/Stainless Steel 304

Z Flange DN150/Multidirection/Stainless Steel 304

W Flange DN200/Multidirection/Stainless Steel 304

V Flange DN250/Multidirection/Stainless Steel 304

Y Specially Customized

Antenna type / materials

A Horn antenna Φ76mm/Stainless Steel 304

B Horn antenna Φ96mm/Stainless Steel 304

C Horn antenna Φ123mm/Stainless Steel 304

Y Specially Customized

Sealing/Process Temp

V Common Sealing/（-40~150）℃

K High Temp Sealing/（-40~250）℃

Electronic Output

2 （4~20）mA/24V DC2 wires

3 （4~20）mA/24V DC/HART2 wires

4 （4~20）mA/220V AC/4 wires

5 RS485/Modbus

Housing/ Proof Grade

L Aluminum/IP67

G Stainless Steel304/IP67

Cable Conduit Port

M M20 x l. 5

N ½ NPT

Local Display/ Programming

A Yes X No

HR264

Type

P Standard Type（Non explosion proof）

I Intrinsic safety type (Exib IIC T6 Gb)

D Flameproof and Intrinsic safety types (Exd [ib] /Exib IIC T6 Gb)

Process connection / materials

G Thread G1½ A/Stainless Steel 304

N Thread 1½ NPT/Stainless Steel 304

B Flange DN80/Stainless Steel 304

C Flange DN100/Stainless Steel 304

D FlangeDN125/Stainless Steel 304

E FlangeDN150/Stainless Steel 304

F Flange DN200/Stainless Steel 304

H Flange DN250/Stainless Steel 304

M Flange DN80/Multidirection/Stainless Steel 304

K Flange DN100/Multidirection/Stainless Steel 304

T Flange DN125/Multidirection/Stainless Steel 304

Z Flange DN150/Multidirection/Stainless Steel 304

W Flange DN200/Multidirection/Stainless Steel 304

V Flange DN250/Multidirection/Stainless Steel 304

Y Specially Customized

Antenna type / materials

C Parabolic antenna Φ242mm/Stainless Steel 304

Sealing/Process Temp

V Common Sealing/（-40~150）℃

K High Temp Sealing/（-40~250）℃

Electronic Output

2 （4~20）mA/24V DC2 wires

3 （4~20）mA/24V DC/HART2 wires

4 （4~20）mA/220V AC/4 wires

5 RS485/Modbus

Housing/ Proof Grade

L Aluminum/IP67 G Stainless Steel304/IP67

Cable Conduit Port

M M20 x l. 5 N ½ NPT

Local Display/ Programming

A Yes X No

HR265

Type

A2 30M Range Type

A3 70M Range Type

A5 70M Solar Power Type

Process connection / materials

Z Steel Bracket

G Thread G1½ A/Stainless Steel 304

N Thread 1½ NPT/Stainless Steel 304

A Flange DN50/PP

B Flange DN80/PP

C Flange DN100/PP

D Flange DN125/PP

E Flange DN50/Stainless Steel 304

F Flange DN80/Stainless Steel 304

H Flange DN100/Stainless Steel 304

K Flange DN125/Stainless Steel 304

Y Specially Customized

Antenna type / materials

B Horn antenna Φ76mm/Stainless Steel 304

C Horn antenna Φ96mm/Stainless Steel 304

D Horn antenna Φ121mm/Stainless Steel 304

Y Specially Customized

Sealing/Process Temp

V Common Sealing/（-40~100）℃

Electronic Output

2 （4~20）mA/24V DC2 wires

3 （4~20）mA/24V DC/HART2 wires

5 RS485/Modbus RTU/6-24Vdc (Standard Type)

Housing/ Proof Grade

L Aluminum/IP67

Cable Conduit Port

M M20 x l. 5

N ½ NPT

Local Display/ Programming

A Yes

X No

HR266

Type

P Standard Type（Non explosion proof）

I Intrinsic safety type (Exib IIC T6 Gb)

D Flameproof and Intrinsic safety types (Exd [ib] /Exib IIC T6 Gb)

Process connection / materials

B Flange DN80/Stainless Steel 304

C Flange DN100/Stainless Steel 304

D FlangeDN125/Stainless Steel 304

E FlangeDN150/Stainless Steel 304

F Flange DN200/Stainless Steel 304

Y Specially Customized

Antenna type / materials

A Horn antenna Φ46mm/Stainless Steel 304

B Horn antenna Φ76mm/Stainless Steel 304

C Horn antenna Φ96mm/Stainless Steel 304

Sealing/Process Temp

V Common Sealing/（-40~150）℃

Electronic Output

2 （4~20）mA/24V DC2 wires

3 （4~20）mA/24V DC/HART2 wires

4 （4~20）mA/220V AC/4 wires

5 RS485/Modbus

Housing/ Proof Grade

L Aluminum/IP67

G Stainless Steel304/IP67

Cable Conduit Port

M M20 x l. 5

N ½ NPT

Local Display/ Programming

A Yes

X No

10. Radar Level Meter Selection Models Parameter Table

Customers Info Register

Company name: Contact name:

Address: Post Code:

Tel: Fax: Mobile:

E-mail: Date: Year Month Day

Type

□ Intrinsic safety Type（Exib IIB T5） □ Intrinsic safety Type（Exib IIC T6 Gb）

□ Standard Type（Non explosion proof） □ Intrinsic safety Type + Marine Type（Exib IIC T6 Gb）

□ Flameproof and Intrinsic safety types（Exd [ib] IIC T6 Gb）

Tank / container information

Tank / container Type：

□Storage tank □Reaction tank □Separation tank □ Marine tank

Tank structure:

Dimension： Material： Pressure：

Height： m Diameter： m

Top of tank： □Vault type □Flat type □ Open type □ Taper type

Bottom of tank： □ Taper type □ Flat type □ Slope type □curved type

Installation： □ Top installation □Side installation

□by-pass installation □Guided wave pipe installation

Tank top connection tube（important info）：

Tube height: mm； Diameter: mm

Medium of measurement

Medium name: □ Liquid □Solid □Mixed Medium

Temperature of medium: ℃ dielectric constant:

Hanging： □ Yes □ No

Mixing： □ Yes □ No

Process Connection

Thread：（□ G1½A □ 1½NPT） Flange（DN= ） Flange（ANSI= ）

Power Supply：

□ 24V DC 2 wires □ 24V DC 4 wires □ 220V AC4 wires

Output：□ 4-20mA □ HART □ RS485 MODBUS

Display： □ Yes □ No