TECHNOLOGY

HOLYKELL®

HPT611

LEVEL

•DATASHEET•

1. Pressure Measurement 2. Level Measurement 3. Temperature Measurement
4. Flow Measurement 5. Display & Control Instruments

HPT 611

Anti Clog Attachment for Submersible Liquid Level Pressure Transmitters

Applications

- Sewage
- Lift stations
- Storm canals
- Reservoirs / dams
- Weirs, wells, pond, reservoir, and dam
- Sludge, slurry
- For sewage water tank level

Characters

- All 316L stainless steel construction for durability
- Open double Flange design
- Diaphragm is protected from physical damage and turbulence
- Added weight prevents movement of the Transmitter
- Cable withstand over 200 pounds of strain
- Ingress protection up to IP 68

TÜVRheinland Precisely Right. Ex CE RoHS

Profiles

HPT611 a fully submersible level transducer is the cost effective solution for sewage or wastewater with viscous medium level measurement.It consists of a imported MEAS TE piezoresistive sensing element encased in a 316L SS housing. Its all stainless steel, hermetically sealed housing make it suitable for immersion for a long time in most industrial sewage and waste water .

Each submersible sewage level transducer 's "Steel cage" design offers the highest reliability in level measurement for severe high solids environments .The steel cage front end design allows for proper flow of liquids while keeping the sensor at the bottom of the tank or well. The "Steelcage" design gives full protection and allows sensing to sewage levels no matter how much debris/mud/sand or rags build up.

Ventilation tube in the cable automatically compensates for changes in atmospheric pressure . The vent is protected with a filter eliminating moisture in the transducer. The circuit design can the under the input and output short-circuit conditions to protect prevent reverse connection .

Holykell can provide a cost effective solution for level monitoring for a variety of applications. Welcome to your inquiry.

Measuring range

Measuring range	
bar	-1 to 0....0 to 1...0 to 20
Kpa	-100 to 0...0 to 100...0 to 2000
psi	-15 to 0...0 to 15...0 to 300
mH2O	-1000 to 0..0 to 1000...0 to 20000

When choosing the PTFE cable, only measuring ranges up to 0 ...10 bar, 0 ... 150 psi and 0 ... 100 mH2O are available.
The given measuring ranges are also available in mbar, kPA and MPa

Materials

Wetted Parts	Standard	Option
Case and	Stainless steel 316	316L SST/SUS321
Sensor	Stainless steel 316	
Cable	PE	PTFE/PUR

Mounting position

Calibrated in vertical mounting position with pressure connection facing downwards.

Specifications

Ambient Temperature: 25°C (unless specified)

Parameter	HPT611				
Overload	200% F.S.				
Burst Pressure	300% F.S.				
Accuracy: (Linearity Hysteresis Repeatability)	≤ ±0.5%F.S (standard) ≤ ±0.25%F.S (regular) Including non-lin., rep. and hys. Optional				
Long Stability	Standard: 0.1%F.S±0.05%				
Working Temp	-20℃~85℃				
Storage Temp	-40℃~125℃				
Temperature Compensation	0℃~70℃				
Medium compatible	Compatible with 316L Stainless Steel				
Electronic Wire	2 Wires		3 Wires		4 Wires
Output	4~20mA	0~5V	0~10 V	0.5~4.5 V	Rs485
Power Supply	12~30 VDC	8~30 VDC	15~30 VDC	5 VDC	10~30 VDC
Insulate resistance	> 100M Ω@50V				
Zero Temp. Drift	0.05%FS/℃ (≤100kPa) ; 0.03%FS/℃ (>100kPa)				
FS Temp. Drift	0.02%FS/℃ (≤100kPa) ,0.01%FS/℃ (>100kPa)				
Electronic connection	Over molded and Fixed cable and water proof IP68				
Process Connect	88 mm (3.5'') Flange, nylon nose cap, DN50 Flange, DN80 , DN100 Flange optional				
Body Diameter	28 mm				
Material of housing	Stainless Steel				
Response time	≤10ms				
Pressure Type	Gage pressure and absolute pressure optional.				
Certificate approving	Exia IICT6 ,RoHS, CE Certificate.				
EMC Standard	EN 61326-1:2013; EN 61326-2-3:2013 EN 61000-6-2:2005; EN61000-6-4:2007+A1				
Water Proof	IP68				
Weight	Net weight is about 1.8KG, Full Packing weight is about 3.0KG (Not Include Cable)				

Dimensions and Drawing

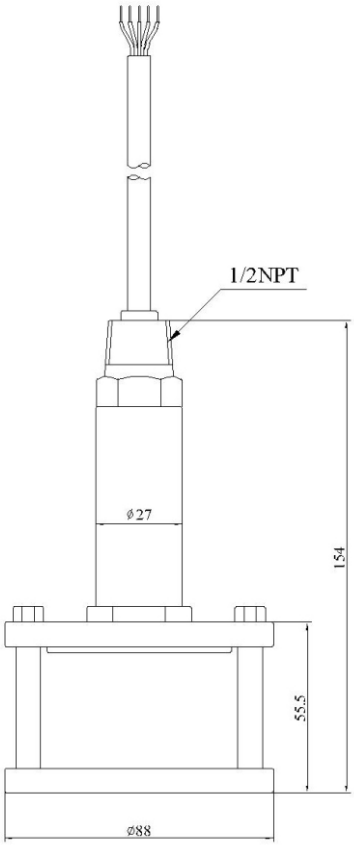

HPT611

Unit: mm

Electronic Connections

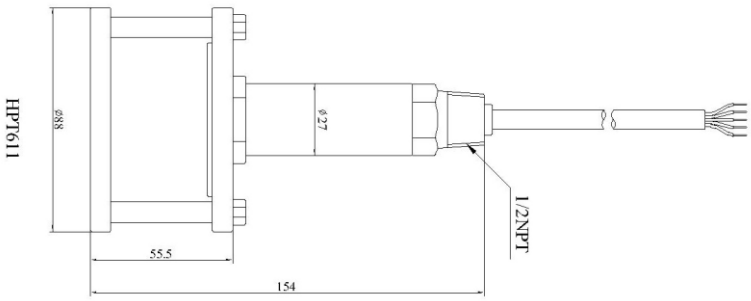

	Directly sealed cable	
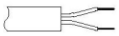	Red	S+
	Black:	S-(0Vcc)
	Green/blue	Signal+
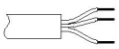	Red	S+
	Black:	S-(0Vcc)
	Green/blue	Signal+
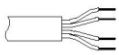	Red	S+
	Black:	S-(0Vcc)
	Green/blue	Signal+

S=Signal, Vcc=Power Supply, GND=Vcc-&S-

Electronic Wires Connection:					
	Supply +	Supply –(0Vcc)	Signal+(RS485A)	Signal -(RS485B)	Ground Wire
2wires 4-20 mA	Red	NA	Blue/Green	NA	Yellow
3wires 0-5V、0-10V、0.5-4.5V、	Red	Black	Blue/Green	NA	Yellow
4wires Rs485	Red	Black	Green	Blue	NA

How to Order

1.Range Selection Table:

00	0~0.5	01	0~1.0	02	0~1.1	03	0~1.2	04	0~1.3	05	0~1.4	06	0~1.5	07	0~1.6	08	0~1.7
09	0~1.8	10	0~1.9	11	0~2	12	0~2.1	13	0~2.2	14	0~2.3	15	0~2.4	16	0~2.5	17	0~3
18	0~4	19	0~5	20	0~6	21	0~7	22	0~8	23	0~10	24	0~12	25	0~15	26	0~16
27	0~20	28	0~25	29	0~30	30	0~35	31	0~40	32	0~50	33	0~60	34	0~80	35	0~100
36	0~150	37	0~200	38	0~250	39	0~300	40	0~500	X	By Customized						

Kindly according to your application select suitable range code , Example: code 19 = 5 .
Unit of measure select on the Part Number Selection Table . Example: Code H=mH_2O, that's 5mH_2O

2.Part Number Selection Table:

HPT611 Selection Type	G	19	H	E5	1	S3	1	002
Pressure type	G=Gage A=Absolute							
Pressure & Level Units	Range reference to range selction table code							
Pressure Unit	B=Bar P=PSI K=kPa M=MPA H=mH2O							
Output	E5= 4-20mA(2 wires) E6= 0-5V (3 wires) E7= 0-10V (3 wires) E8= 0.5-4.5V(3 wires) E11= RS485 MODBUS RTU (4 wires) X= By Customized							
Pressure connection	1=Double 88 mm(3.5'') Diameter Flange (Typical) X= By Customized							
Power Supply	S3=24 V DC (Standard) S6=5V DC (for E8) S10=12~36 V DC S9=15~36V DC (for E7) S17=10~30V DC (for E11)							
Accuracy	1=0.5%F.S.	2=0.25%F.S						
Cable length	0=Non-Cable	001= Cable 1M	002= Cable 2M	x= By Customized				

Accessories

	Description	Order number
	Liquid level display control device with all kinds of liquid level sensor, measurement according to liquid level, and according to the setting of the container structure and size and the density of liquid, calculation, display liquid volume or quality	0008
	NPT adapter The 316 SS G1/2 adapter replaces the removable protective cap and converts the threads to 1/2"NPT male external, 1/4" female internal threads.	0001
	Surge Protector (Lightning Arrestor)14052336 This DIN rail mounted surge protector is designed to protect PMC transmitters to a maximum discharge current of 20 kA.	0007
	Conduit adapter 316 SS 1/2" NPT male cable conduit adapter. Must be factory installed	0011
	Terminal box The terminal box, with IP 67 ingress protection and watertight ventilation element, provides a moisture-free electrical termination for the submersible pressure transmitter. It should be mounted in dry environment or directly in the switch cabinet.	0003
	Additional weight14052336 The additional weight increases the dead weight of the submersible pressure transmitter.It simplifies the lowering into monitoring wells, narrow shafts and deep wells. It effectivelyreduces negative environmental influences on the measuring result from the measured medium (e.g. turbulent flow).Stainless steel 316L, approx. 500 g, length (L) 130 mm	0009
	Adapter Converter It is able to convert RS-232 signal to RS-485 balanced differential signal and extend the communication distance to 1.2km.It uses a particular pump to gain power from RS-232 signal (RTS, DTR, TXD) without initializing the RS-232 series interface.This interface converter does this without requiring any AC or DC power.	0005
	Desiccant drying cartridge Desiccant Pack installed on Vented Transducer cable.The cartridge will have to be field replaced as site environment requires.	0010
	Flange The 316 SS flange replaces the removable thread and customizable flange size.	0002

Ordering information

Model / Measuring range / Output signal / Temperature measurement / Cable material / Cable length / Case / Lightning protection / Accessories

HOLYKELL TECHNOLOGY COMPANY LIMITED
•www.holykell.com•
•E-mail：admin@holykell.com
•Tel ： +86 731 89873265
•Fax ： +86 731 89873265